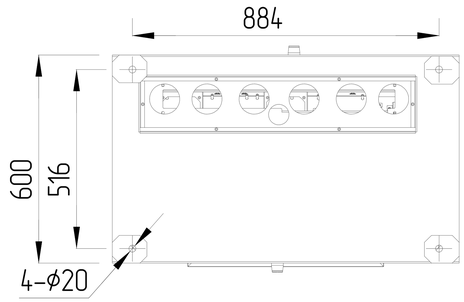

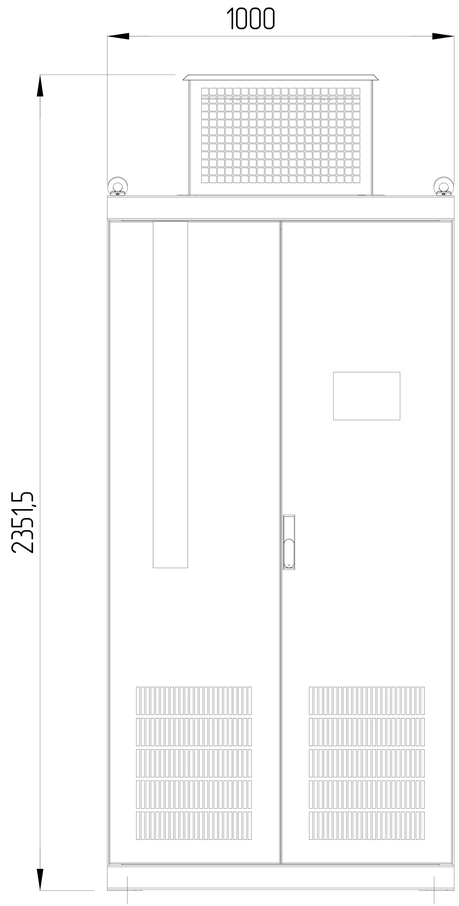

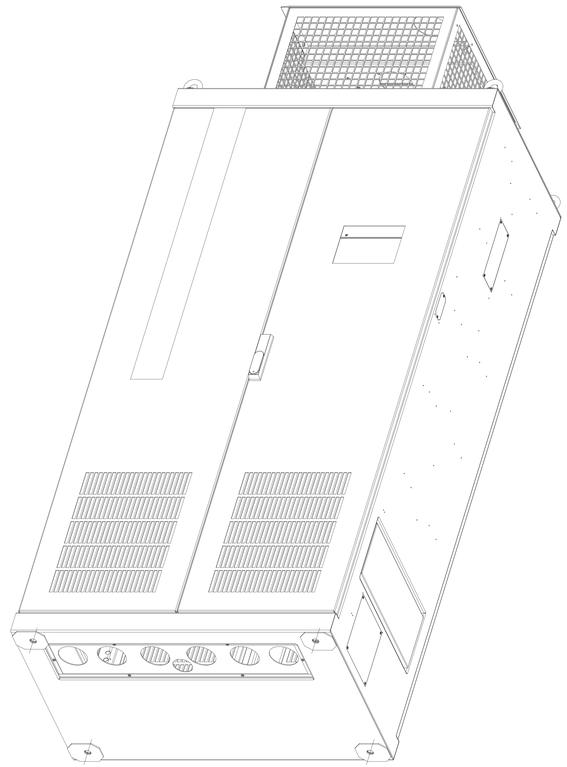

	kgf*cm		
M3	≥12	0.5-3	±0.1
M4	≥18	3-6	±0.1
M5	≥33	6-30	±0.2
M6	≥55	30-120	±0.3
M8	≥150	120-400	±0.5
M10	≥300	400-1000	±0.8
M12	≥550		±0.2

AD900, типоразмер D9
450/500~630/710 кВт

MM

1:25